Conveyor Belt Misalignment Switch

LHPxx-xx/x-L50 as well as LHPxx-xx/x-L
LHMxx-xx/x-L50 as well as LHMxx-xx/x-L
Installation and operating instructions

DITTELBACH UND KERZLER

Principle: Before any work shall be carried out it has to be checked that the circuits are isolated and any specific and general security instruction has been fulfilled.

Conveyor belt misalignment switches of this type are provided to be installed pair-wise left and right of the belt. In case that the belt should misalign from the given track, the roller lever of one of these switches will be touched by the flank of the belt and displaced against the resetting force of an internal spring. Actuation of the contacts and latching (latching only versions with „w") is being effected in snap-action characteristic. The maximum displacement angle of the roller lever is 75°. In case the amount of offtrack is reduced, release of the latching is possible by elevating the blue release lever (only versions with type figures "w") or reset happens automatically (only versions without type figure "w"). In addition to these functions, all switches with „V" in the type figures are additional equipped with leading contacts commutating for a prewarning.

There are 2 different diameters of the roller bodies: 50mm roller , the type figures on the type plate are ending with **-L50** or **–L50V** ---- 40mm roller, ending with **-L** or **–LV**.

Pre-mounting –L50: Put the switch onto its feet that way that the identification plate is on the left side. Take the enclosed roller and pin it with roller upwards left (approx 11 o´clock) onto the free shaft end and tighten the inbus-screw of the hub.

Pre-mounting -L: Put the switch onto its feet that way that the identification plate is on the left side. Screw out the screw of the shaft showing to you together with the washer by aid of a 10 mm wrench. Take the enclosed roller lever that way that the decreased bore is at your side. Pin this lever with roller upwards left onto the free shaft end and tighten with the previously screwed out screw and washer with a torque of 8 Nm.

Mounting: Install the switch on a plane and stable console on the conveyors structure. Align the switch that way that the lever shows into direction of the belt area (see sketches below). Taking into consideration that the conveying belt is in its normal position, middle height of the roller lever should be on the same height as the edge of the belt. In normal position of the belt (no misalignment) there should be a clearance between the roller and the edge of the belt as could be tolerated. Fixing of the switch with two 2 suitable screws maximum 10,5mm diameter at the slotted feet. The roller –L50 allows later setting of the clearance

Electrical installation: Open lid by loosening the 4 slotted lid screws. Inside are up to 4 micro switches. Each micro switch with its terminals is marked with the symbol of the corresponding function. Wire them according your demands, the max. cross section is 2.5mm² . Afterwards put on the cover again and tighten the lid screws with a torque of 3 Nm. Tighten the cable glands according to the instructions of the manufacturer, the max. torque on enclosures side is 6 Nm.

Check: Please check any electrical and mechanical function after completion of installation.

Inspection: These switches should be inspected prior putting into service and afterwards in regular intervalls on mechanical and electrical function. The roller body of the lever has to be inspected on smooth running and on wear: The minimum diameter is 37.5mm (-L) or 47.5mm (L50). Before understepping, the lever has to be exchanged, the spare part numbers are

Spare parts: roller lever -L50 (50mm roller) E60024 , roller lever -L (40mm roller) E60020

Technical Data

Switch angle	types with "E" in the type letter 15°, without 25°
Leading contact („V")	types with "E" in the type letter 7°, without 15°
Max. displacement	75°
Roller lever	**"-L50"** stainless steel ø50mm, stepless adjustable, double stainless steel ball beared **"-L"** stainless steel ø40mm, fix on the switch shaft, double stainless steel ball beared
Cable inlet	2x M25-threaded holes
Contacts	NC contacts snap action, direct opening NO contacts snap action
Protection	IP 67
Housing material	Glass fibre reinforced polyester (LHP..) cast iron (LHM)
Weight	LHP… 2.9kg, LHM… 6.5kg
Fixing	2 holes for M10-screws
Operating temperature	- 40°C up to +85°C

Original EC Declaration of Conformity

According to 2006/95/EC as well as to 2014/35/EU
As mandatory we hereby declare that the electrical equipment named above conforms to the above mentioned directive.

Description of equipment:	Conveyor Belt Misalignment (off track) Switch
Relevant directives:	2014/35/EU, 2006/95/EC
Applied harmonized standards:	EN 60947-5-1, EN 60204, EN60529 with latching (letter „w") EN 60947-5-5
Date of application of CE-mark:	2003
Place + date of issue:	Gießen, 3.10.2019
Legally binding signature:	Eckart Maas (General Manager)

Version –L

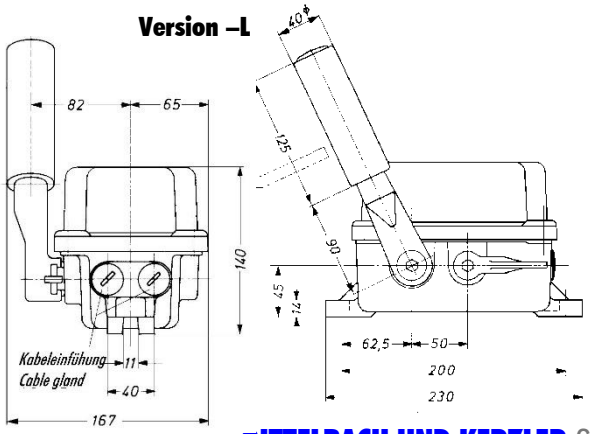

Version –L50

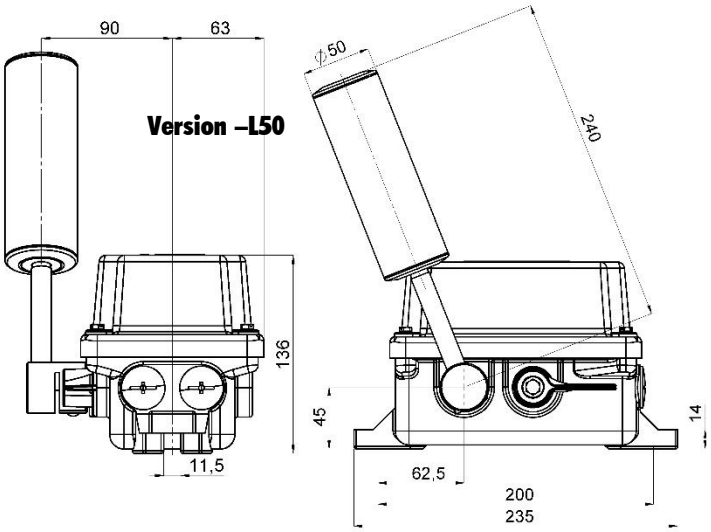

DITTELBACH UND KERZLER GmbH & Co. KG Talstrasse 27 D-35394 Giessen
Tel.: +49 641 97224-0 Fax: +49 641 97224-22 e-mail: info@DUK.eu