Pull Cord Switch

LHP$_x$W-$_{xx}$/$_x$-B
LHM$_x$W-$_{xx}$/$_x$-B

DITTELBACH UND KERZLER

Interchangeable to the AEG-pullcord switch „NSR“

- **Impact resistant BMC enclosure** **optional cast iron**
- **IP67**
- **Up to 2 x 50 metre pull cord**
- **Up to 8 contacts**
- **Snap action**
- **Direct opening, positive drive**

The design of these pull cord switches considerates heavy duty service. Enclosures made of most stable, impact resistant, thick walled glass fibre-reinforced polyester (BMC) or optional of cast iron are the best guarantors for long year reliable service. Both types are at least IP67-protected (water- and dust proof).

Pull cord switches of this type are for double-sided rope mounting with a maximum rope length of 2 x 50metres. Pulling on one of these ropes operates all contacts via snap action mechanism independent on the direction of pulling. Simultaneously with this operation the latching is being effected automatically. The status (operated/not operated) as well as the direction from where the switch has been operated is indicated by the position of the latched actuation lever. The direct opening system (positive drive) forces the snap action NC-contacts into open position under all circumstances.

These switches will be equipped with up to 4 micro switches. Each micro switch incorporates either 1NC plus 1NO contact or alternatively 2NC's. They commutate independent on the direction of pull cord actuation. The contacts are made of silver, a gold coating is optional. The contact surfaces are wiping: with every actuation,they are cleaning themselves. Each micro switch is certified by VDE and CCC and is bearing their signs:

The switches are approved also to bear the Eurasian EAC sign.

Unrivalled long pull cord travel and the high actuation force prevent unwanted stops caused by solids falling onto the pull cord.

Guarantors for an extended, reliable life time are most important details like sealing rings protecting the shafts, an extra hard rubber gasket in the lid, shafts and screws made of stainless steel,

Options

- Dupline Safety Bus or Fieldbus by Carlo Gavazzi
- Signalling light
- Explosion protection (ATEX) separate leaflet

DITTELBACH UND KERZLER GmbH & Co. KG Talstrasse 27 D-35394 Giessen
Tel.: +49 641 97224-0 Fax: +49 641 97224-22 Web: www.DUK.eu E-mail: info@DUK.eu

Pull Cord Switch LHP$_x$W-xx/$_x$-B LHM$_x$W-xx/$_x$-B

The demands of the European standards EN 60947-5 and DIN EN 418 for automatic emergency stop command due to rope fracture are fulfilled when used in combination with preload springs SPF-W

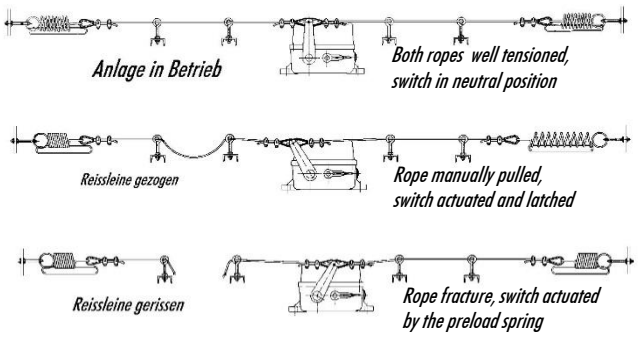

Selection table

Switch type	Contacts NC	Contacts NO	Contact surface
FRP (BMC) enclosure			
LHPEw-10/1-B	1	1	Silver
LHPEw-18/1-B	2	-	Silver
LHPEw-10/2-B	2	2	Silver
LHPEw-18/2-B	4	-	Silver
LHPEw-18/1+10/1-B	3	1	Silver
LHPw-10/3-B	3	3	Silver
LHPw-10/4-B	4	4	Silver
Cast iron enclosure			
LHMEw-10/1-B	1	1	Silver
LHMEw-18/1-B	2	-	Silver
LHMEw-10/2-B	2	2	Silver
LHMEw-18/2-B	4	-	Silver
LHMEw-18/1+10/1-B	3	1	Silver
LHMw-10/3-B	3	3	Silver
LHMw-10/4-B	4	4	Silver

All types also available with Gold contacts:
Instead off the figure „10" the figure „13" and
Instead off the figure „18" the figure „19".
e.g. LHPE-13/1-B (1NC + 1NO gold contacts)

Technical Data

According to standards	EN 60 947-5-5 / EN60204 / EN13850 if equipped and proper installed with 2 pretensioning springs type SPF-W
Approval of micro switches	DVE Reg.Nr.: 6671, 6827, 40026213
Aproval	EAC
I_{th} (thermical current)	10A
Rating	Silver: 400VAC 6A / 230VAC 8A / 24VDC 10A / 80VDC 3 A
Minimum Current	Gold: 1mA bei 6VDC
Utilization Category	Silber: AC-15 230V 1A DC-13 110V 0,5A Gold: AC-12 230V 250mA DC-12 110V 250mA
U_i Rated Insulation Voltage	400V
U_{imp} Rated Impulse	4kV
Terminals	Screw, each terminal clamp 1 or 2 cables, each max 2,5mm²
Protection	IP67 acc. EN 60529, at least IK08 acc. EN 66262
Cable Entries	2 x M25-threaded, EXW closed by IP67-protecting plugs
Housing Material	Fibreglass Reinforced Polyester BMC (types LHP….) Cast Iron (LHM…)
Colours	yellow RAL 1003, optional red RAL 3000
Coating	Cast iron 2 layer 2-component PU / BMC none
Weight / Mass	approx. 2.2 kg (LHP...), 6 kg (LHM...)
Mounting position	free
Ambient operation temperature	- 40°C up to +85°C (-55°C on request)

Basic values for calculation of SIL or PL according EN 13849 and IEC 61508:
$B_{10} = B_{10}d$ 80000 cycles

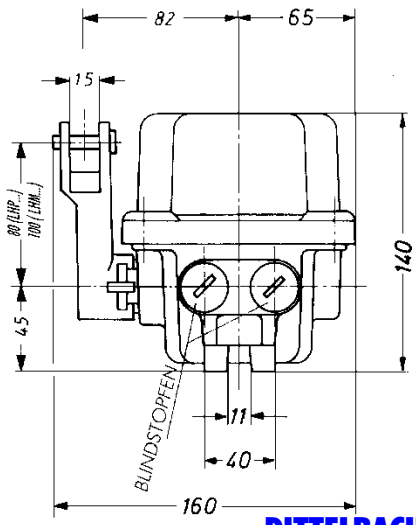

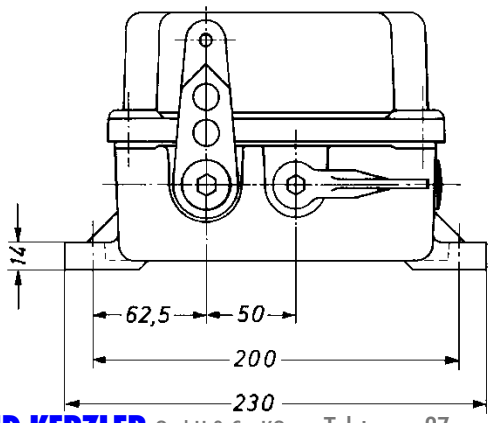

DITTELBACH UND KERZLER GmbH & Co. KG Talstrasse 27 D-35394 Giessen
Tel.: +49 641 97224-0 Web: www.DUK.eu E-mail: info@DUK.eu

Technical data subject to alteration. All pictures and dimensions non-committal. The quoted brand or company names and trademarks are not marked. They are the property of their respective owners. Their mention has merely describing function. Their naming is in recognition of all rights of their respective owners. Stand 08/2022